TIMBER FRAMING

JOURNAL OF THE TIMBER FRAMERS GUILD

Number 68, June 2003

Kezurou-Kai in America

Frame Repair Techniques

ARCHITECTS and engineers engaged in timber frame repairs, restorations and stabilizations should first familiarize themselves with early timber frame design and function. Understanding how the various loads are handled by the timber frame is crucial to designing the repairs. A good working knowledge of timber joinery is also essential both for understanding the configuration of joints *in situ* and designing the repairs. A good reference is my *Historic American Timber Joinery*, recently published by the Timber Framers Guild.*

When first introduced to a particular project, the professional should develop with the client a repair philosophy. This set of intentions is to be based on the condition and value of the structure, the client's proposed use of the building and, of course, budget. Obviously, a rough farm barn will require a repair philosophy much different from that of a museum house. All repair philosophies are valid if understood at the outset by all parties.

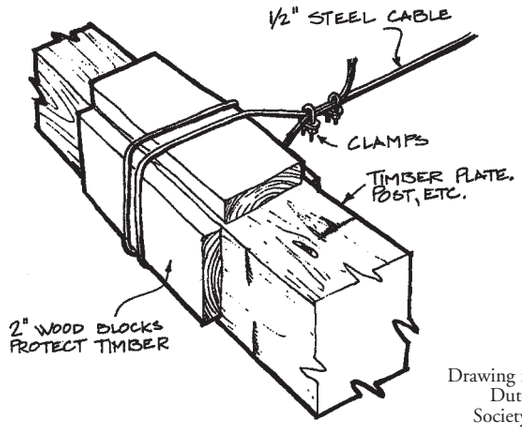

Drawing first published in the Dutch Barn Preservation Society Newsletter, Vol III, Issue 1, Spring 1990

Fig. 1. Many repair jobs begin with stabilization of the building. Steel cables are strong and useful, but cabled timbers must be protected by hardwood pads like those shown here.

Drawings Jack A. Sobon

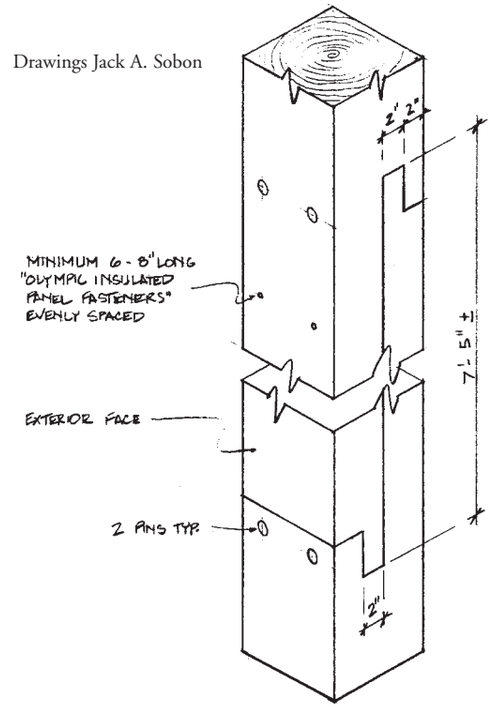

Fig. 3. Half the thickness of this post was hacked away to conceal it in a stud wall. The elongated scarf joint retains the maximum amount of the original post. The usual pins through the blades secure the joint, while slender deep-thread fasteners keep the long laps from separating in the middle.

If the entire scope of the work is beyond the budget, the structure needs first to be stabilized. The repairs can then be ranked and the client can phase the work to accommodate the budget.

For museum work, relocated structures and large projects requiring extensive repairs, full framing drawings are necessary.

*Available directly from the Guild (413-623-9926 or tfguild.org).

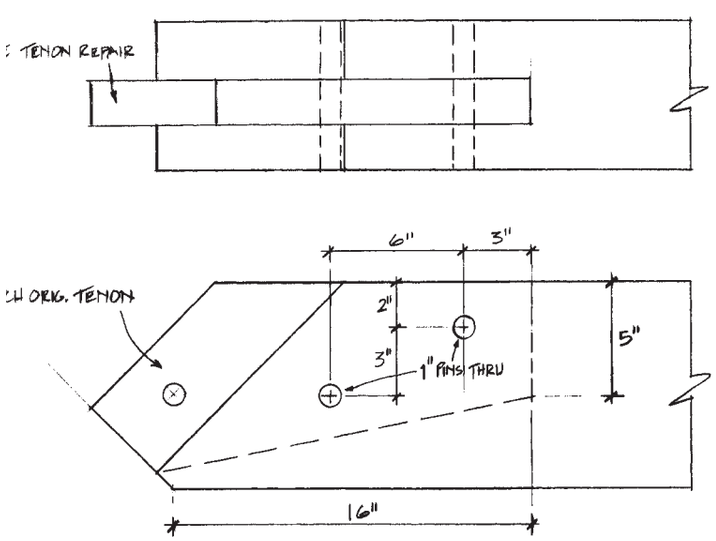

Fig. 2. Brace tenon repair to a central tenon using inserted free tenon minimizes the visibility of the repair and maintains the bearing shoulder. The repair pins may be kept blind on the visible side.

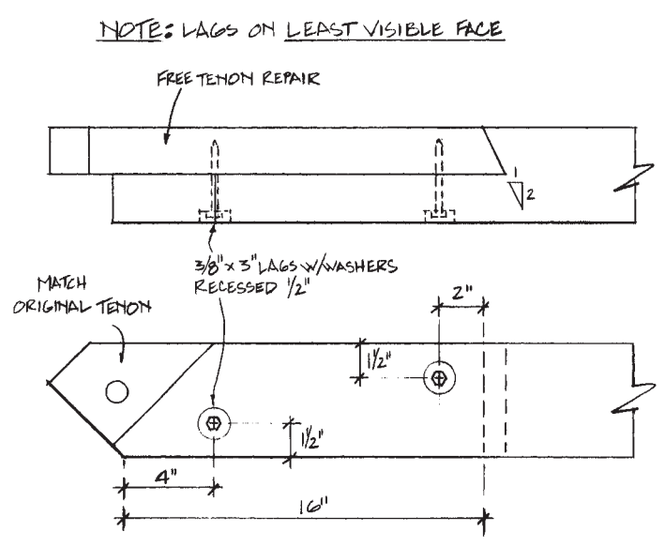

Fig. 4. Brace tenon repair to a barefaced tenon. The undersquinted lap joint is secured by a pair of lag screws from the invisible (or less visible) side of the brace.

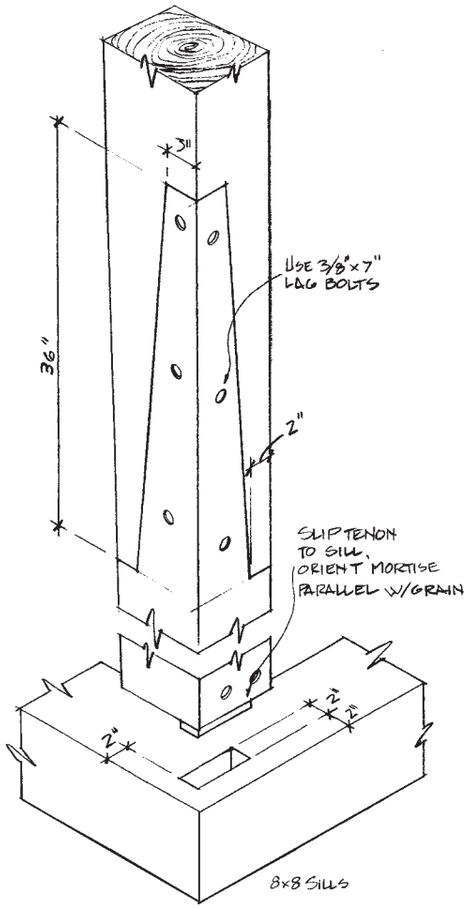

Fig. 5. This scarf configuration preserves nearly all of the original interior surfaces of a corner post substantially decayed on its outside corner. Slip (free) tenon allows reinstallation to the standing frame.

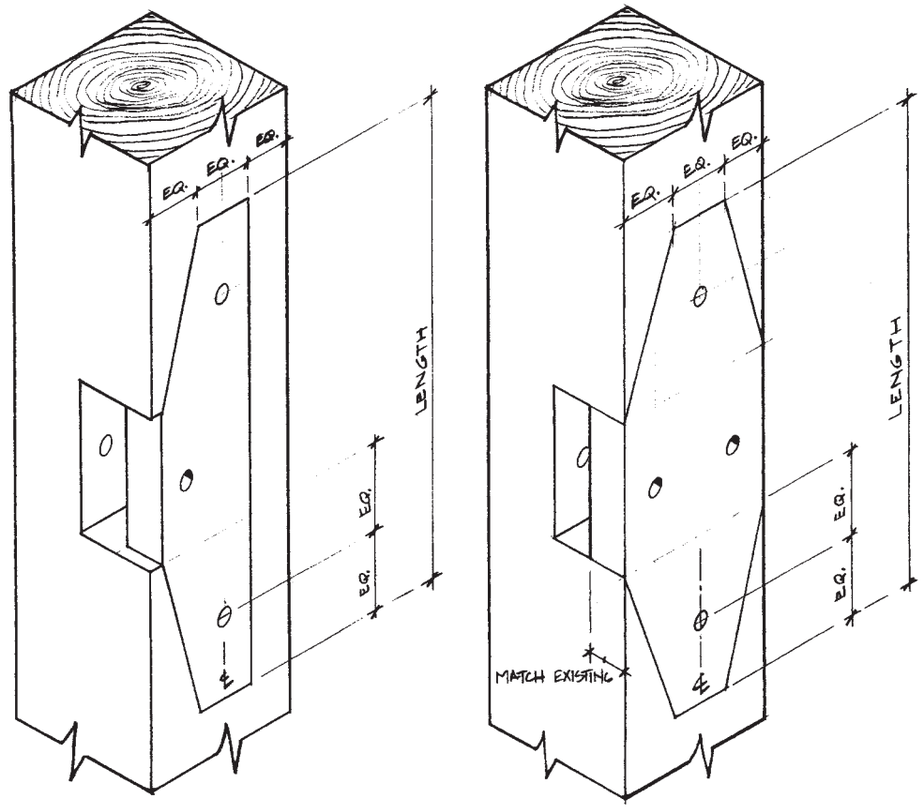

Figs. 7 and 8. Where girts or braces join posts, decay can make pin and vertical bearing surfaces ineffective. These repairs are typically made to an outside (and thus invisible) face. Holes for the fastening pins are bored at opposing angles to secure the patch.

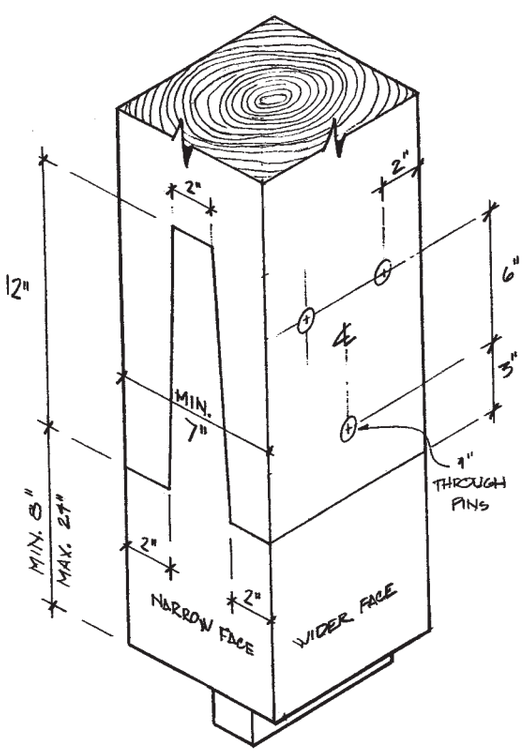

Fig. 6. When just the bottom of a post is decayed, this conservative repair is relatively inexpensive to cut. But the post should be at least 7 in. thick.

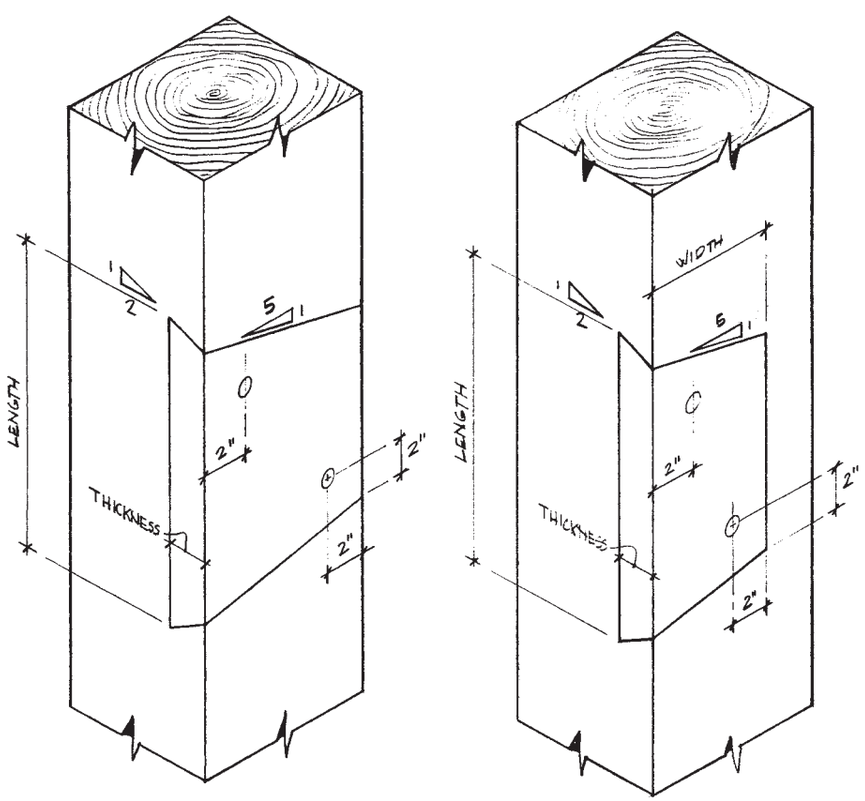

Figs. 9 and 10. When just the surface is decayed (e.g., where a rafter bears on a plate or a stud on a sill), a tapered undersquinted patch can be slid into place until snug. In the figures, the length component is specified by the engineer or architect.

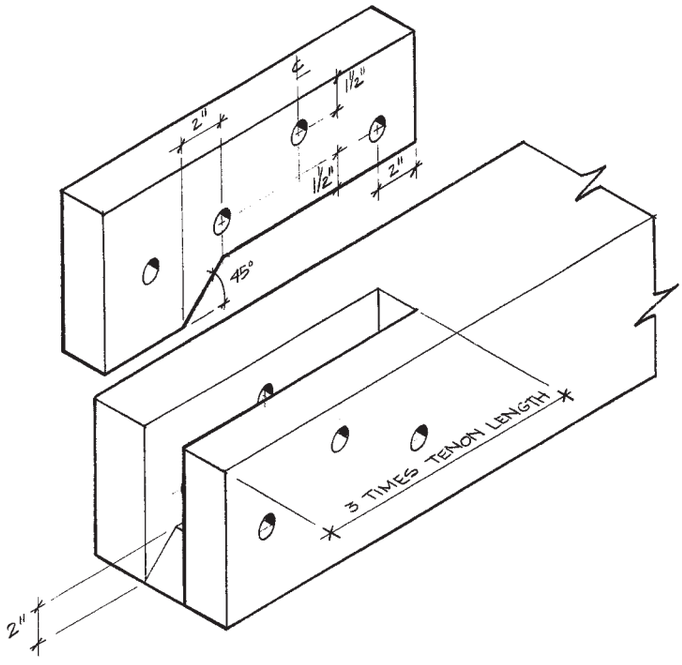

Fig. 11. Concealed free tenon repair for the end of a timber. The pins may be blind on the visible side.

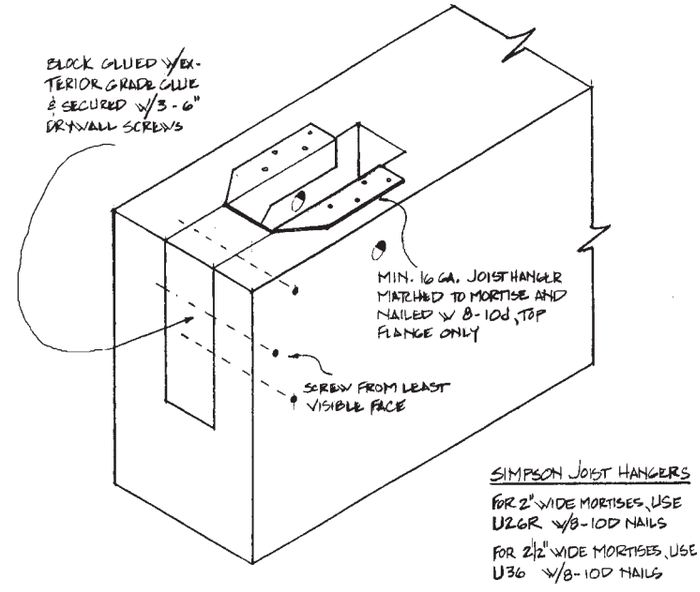

Fig. 13. The relish of mortises at the end of a timber such as a plate or sill often pops out under load. In addition to new relish carefully fitted, glued and screwed in place, this repair uses an off-the-shelf joist hanger (available in the common mortise widths) that reinforces the joint and ultimately will be concealed.

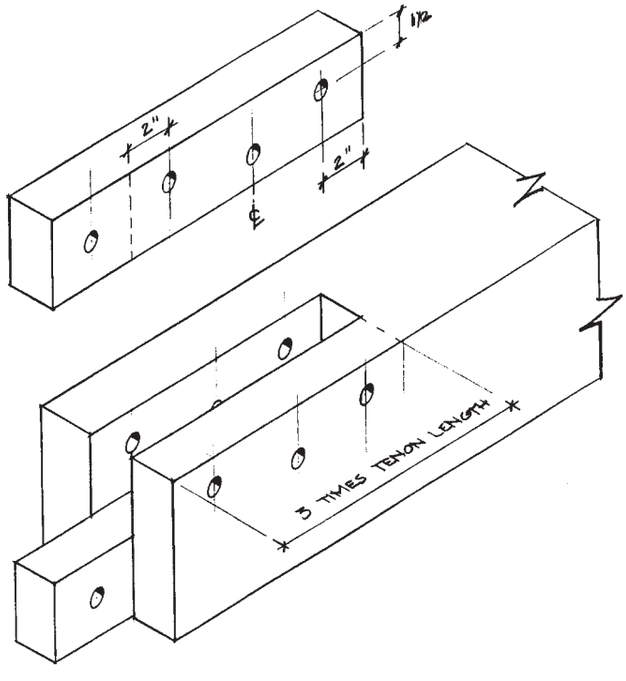

Fig. 12. When only a portion of the tenon is broken or decayed, only that portion need be replaced, with a partial free tenon. Pins can be kept blind on one side.

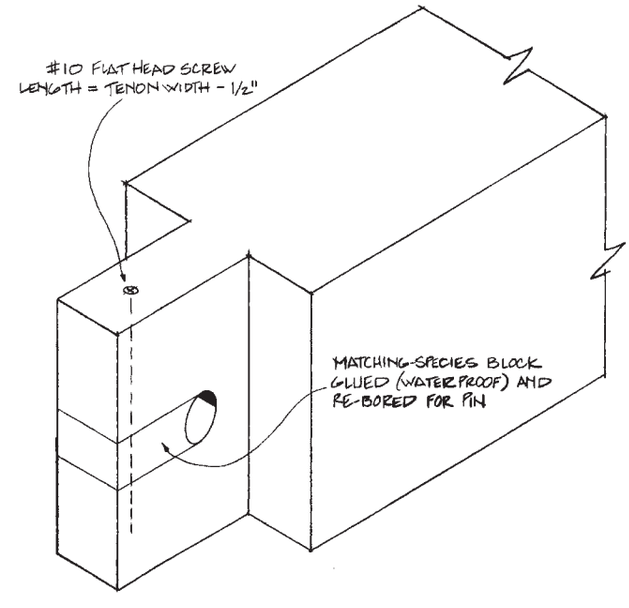

Fig. 14. When the pin hole relish is missing but the tenon is otherwise sound, a new section is carefully fitted, glued and screwed, then rebored with the original offset. Though unable to handle large tensile loads, it can draw the joint up tight.

They are a great aid to the design professionals (engineer and architect), the building officials, ancillary trades, the contractors and the owner. For simpler projects with minimal budgets, quick field sketches may suffice. Though they may be done quickly, they should specify all materials and joinery, and copies should be in the hands of the owner, the professionals and the contractors. Drawings are essential for communication and estimating.

The actual repairs should be designed with these criteria:

1. Repairs using traditional carpentry techniques are preferable to modern solutions (e.g., steel, epoxy, engineered wood, etc.). This criterion helps to keep the timber framing craft alive.

2. Materials should match the original work if possible in species and surface (hand hewn, sawn, hand forged, and the like).

3. Structural integrity, ease of execution and insertion, and ultimate durability should determine the choice of repair technique.

4. Minimal disturbance should be made to the building's fabric, and minimal visibility should characterize the repair.

The figures, a sampling of repair drawings from actual jobs, give some idea of the possibilities, which are extensive. Most show somewhat typical repairs; Figs. 3, 16 and 18 were specific to their projects. All proposed repairs should be checked by a design professional for the specific situation at hand. —Jack A. Sobon

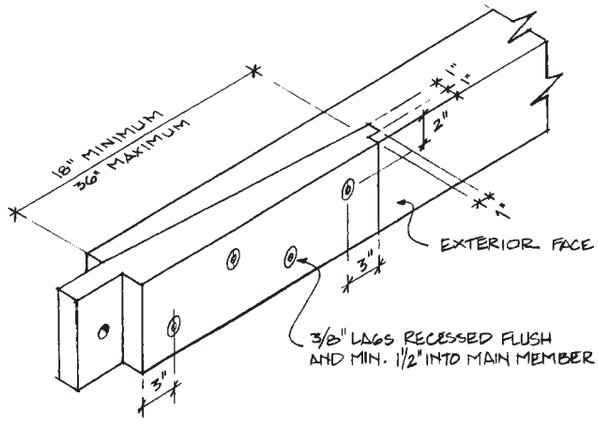

Fig. 15. When more than the tenon is decayed, this timber end repair can be used, secured by mechanical fasteners from the least visible face.

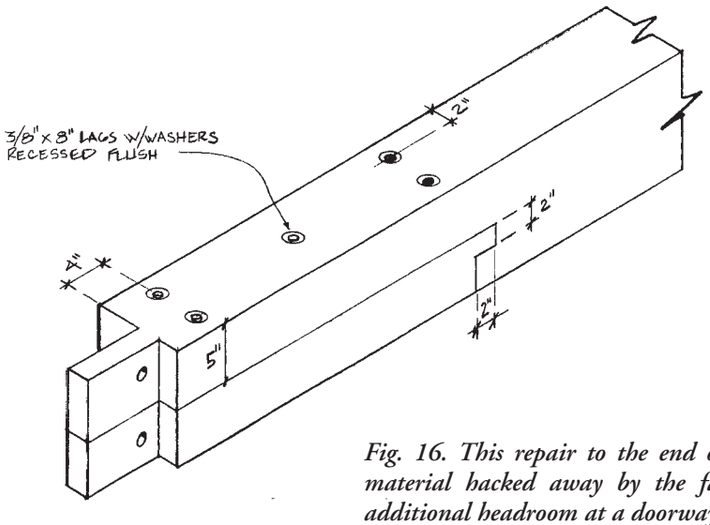

Fig. 16. This repair to the end of a girt replaced material hacked away by the farmer to provide additional headroom at a doorway. Lag screws from the unseen upper face secure the bladed lap .

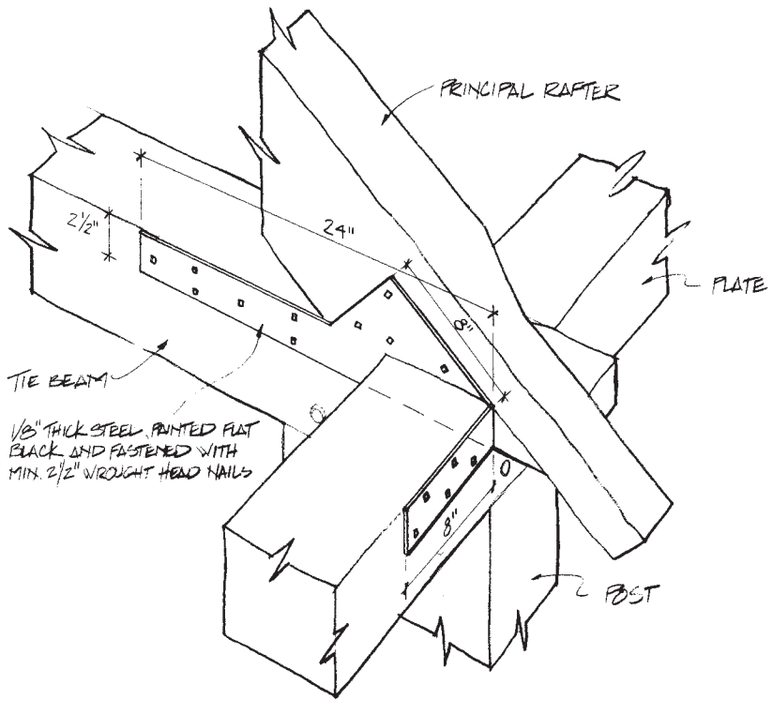

Fig. 18. Later carpentry compromised both the tie beam's lap dovetail joint at the plate and the relish of the principal rafter mortise in this 1770s tying joint. A low-profile, custom-fabricated steel gusset was the best solution here.

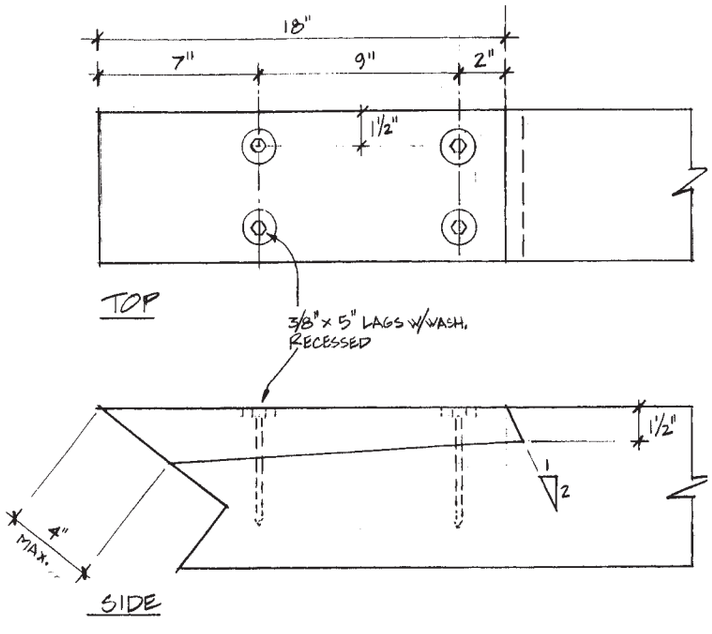

Fig. 17. This undersquinted lap repair was specified for the butts of Duch barn rafters approximately 7 in. square at their bearing ends. Original wood keeps the birdsmouth functional.

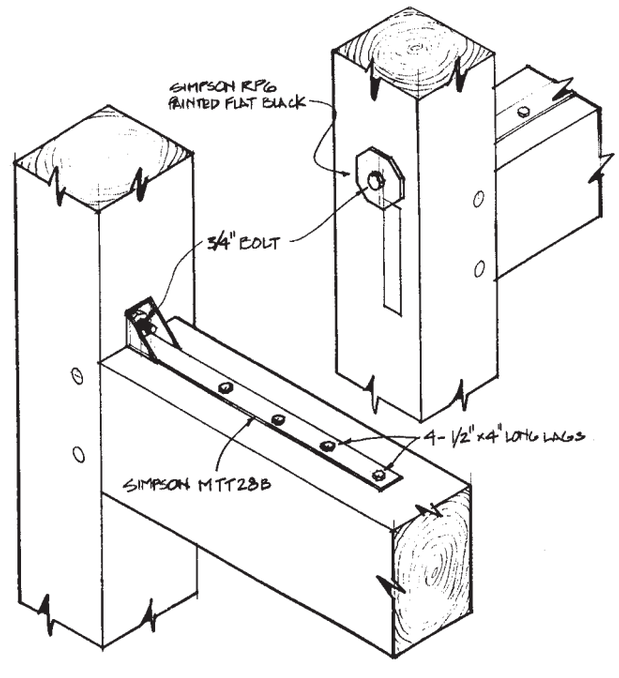

Fig. 19. Off-the-shelf components reinforce a tying joint in place. Allowable component loads are listed by the manufacturer.